MODULAR LIGHTING — INSTRUMENTS

Date	
Customer	
Project	
Type	

FFD_Track 230V Dali Power Feed Right White

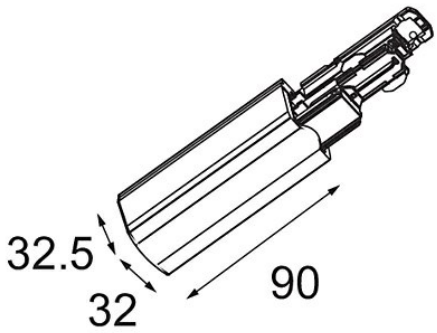

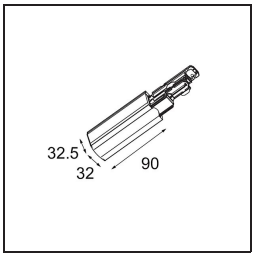

Specifications

Materiale	14210501
Lampadina inclusa	No
Numero di fonte luminosa	0
Volt in ingresso	230V
Classificazione elettrica	I
Grado IP	20
Test filo a caldo (°C)	960
Interno/Esterno	Interno
Orientabilità	Not Applicable
Colore primario & Finitura primaria	Bianco,
Peso lordo (g)	83,0

Modular L.I. reserves the right to alter material, dimensions and characteristics without prior notice. Lighting technology changes rapidly
Latest datasheet and documentation available on www.supermodular.com - 2025-08-28, 06:44:29 AM - ©Modular Lighting Instruments