MODULAR LIGHTING — INSTRUMENTS

Date	
Customer	
Project	
Type	

Ring Recessed Trimless 146 1x

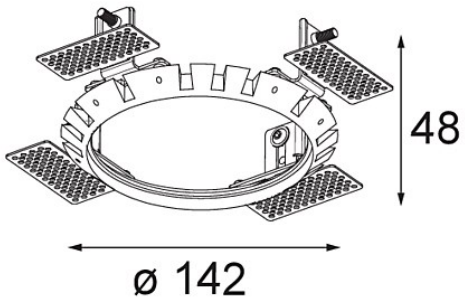

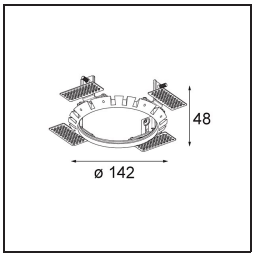

Specifications

Material	14204030
Lamp Included	No
Number of Light Sources	1
IP Rating	20
Glow wire rating (°C)	960
Indoor/Outdoor	Indoor
Application	Ceiling, Wall
Mounting	Recessed
Cut-out size (mm)	146
Adjustability	Not Applicable
Gross weight (g)	249.0

Modular L.I. reserves the right to alter material, dimensions and characteristics without prior notice. Lighting technology changes rapidly
Latest datasheet and documentation available on www.supermodular.com - 2026-11-06, 04:40:55 AM - ©Modular Lighting Instruments