MODULAR LIGHTING — INSTRUMENTS

Date	
Customer	
Project	
Type	

Installation Housing 123x100x80

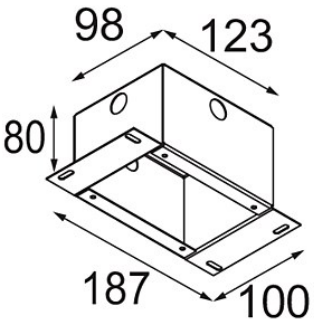

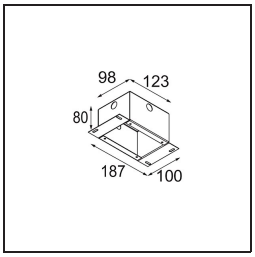

Specifications

Material	10889530
Lamp Included	No
Number of Light Sources	0
IP Rating	20
Glow wire rating (°C)	960
Indoor/Outdoor	Indoor
Application	Ceiling, Wall
Adjustability	Not Applicable
Gross weight (g)	505.0

Modular L.I. reserves the right to alter material, dimensions and characteristics without prior notice. Lighting technology changes rapidly
Latest datasheet and documentation available on www.supermodular.com - 2026-11-07, 04:03:54 PM - ©Modular Lighting Instruments