MODULAR LIGHTING — INSTRUMENTS

Date	
Customer	
Project	
Type	

Installation Housing 183x312x122

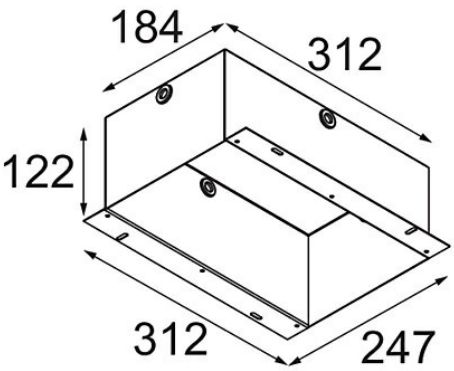

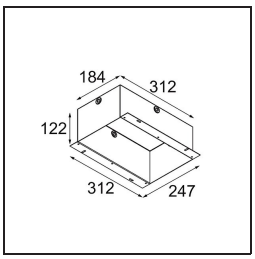

Specifications

Materiale	10390130
Lampadina inclusa	No
Numero di fonte luminosa	0
Grado IP	20
Test filo a caldo (°C)	960
Interno/Esterno	Interno
Applicazione	Soffitto, Parete
Orientabilità	Not Applicable
Peso lordo (g)	1890,0

Modular L.I. reserves the right to alter material, dimensions and characteristics without prior notice. Lighting technology changes rapidly
Latest datasheet and documentation available on www.supermodular.com - 2026-01-14, 09:30:56 PM - ©Modular Lighting Instruments